Washer extractor

S7-75

Features and benefits

- **Intelligent controller offers:**
  - Large display and one control knob for easy program selection
  - Language selection
  - Create new programs in your PC with the Laundry Program Manager, then transfer them to machines via USB port
  - Wash program packages optimized on Economy, Performance and Time. (Available on general programs)
  - By using the Laundry Program Manager tool you can edit and create new programs to adapt to the requirements of your business
- Low water and energy consumption – see table below
- Four compartment detergent box for manual dosing of powder or liquid detergent
- High extraction force for efficient dewatering
- Door with gasket and strong hinges built for heavy duty operation
- Stainless and galvanized steel in all vital parts for high degree of rust protection
- **Proven robustness:**
  - Maximises the extraction force, leading to highest dewatering and savings in drying
    Minimizes the stress on the machine, leading to trouble-free operation and increased machine lifetime
    Reduces vibrations, making it possible to install the machine in all locations

Images shown are a representation of the product only and variations may occur.

Main options

- Automatic liquid detergent supply (optional I/O board)
- Stainless steel front panel
- Connection to booking- /payment- system or coin meter
- Drain pump

Main specifications		S7-75	
Max. capacity, filling factor 1:9	kg/lb	8/18	
Drum, volume	litre	75	
Drum, diameter	ø mm	520	
Extraction	rpm	830	
G-factor		200	
Standard heating alternatives	electricity, kW	7.5	
Other energy heating alternatives	electricity, kW	2.0 / 3.0 / 5.4[1]	
	steam	x	
	non-heated	x	
Consumption data "Normal 60°C" Economy[2]		El	Steam[3]
Total time	Min	49	49
Water consumption (cold+hot)	litre	53+13	66+0
Energy consumption (motor/heating/hot water)	kWh	0.1/0.4/0.8	0.1/-
Steam consumption	kg	-	1.8

1. Special requirement on request.
2. Water temperature 15°C cold water and 65°C hot water.
3. Depending on steam pressure.

Produced according to ISO 9001 and ISO 14001.
Certified with CB certificate for Low Voltage Directive and S-mark according to the Machinery Directive. Protection class IP X4D.

Electrical connections					
Heating alternative	Main voltage	Hz	Heating power kW	Total power kW	Recommen-ded fuse A
Electric heated	220-240V 1/1N~	50/60	3.0/5.4/7.5	3.3/5.7/7.8	16/25/32
	220-240V 3~	50/60	3.0/5.4/7.5	3.4/5.7/7.8	10/16/25
	380-415V 3N/3~	50/60	3.0/5.4/7.5	3.4/5.7/7.8	10/10/16
	440V 3~	50/60	5.4/7.5	5.7/7.9	10/16
	480V 3~	60	5.4/7.5	5.7/7.9	10/16
Non heated/Steam heated	208-240V 1/1N~	50/60	[1]	0.4	10
	380-480V 1~[2]	50/60	[1]	0.4	10

1. Total power and recommended fuse does not depend on the heating power in those cases.
2. Prepared for 3~

Water and steam connection[1]		S7-75
Water valves	DN	20
Water pressure	kPa	200–600
Capacity at 300 kPa	l/min	20
Drain valve	ø mm	75
Draining capacity	l/min	170
Steam valve	DN	15
Steam pressure	kPa	300–600
Liquid detergent supplies		5
Floor requirements		
Frequency of the dynamic force	Hz	13.8
Floor load at max extraction	kN	1.6 ± 3.4
Sound levels		
Sound power/pressure level at extraction[2]	dB(A)	73/59
Sound power/pressure level at wash[1]	dB(A)	62/48
Heat emission		
% of installed power, max		5
Shipping data[3]		
Weight	net, kg	116
Shipping volume	m^3	0.75
Accessories		
Steel base		x
Hose kits for water or steam		x
Fluff collector		x

1. Operating panel
2. Door opening ø 310 mm
3. Detergent box
4. Cold water
5. Hot water
6. Re-used water
7. Drain
8. Liquid detergent supply
9. Electrical connection
10. Steam connection
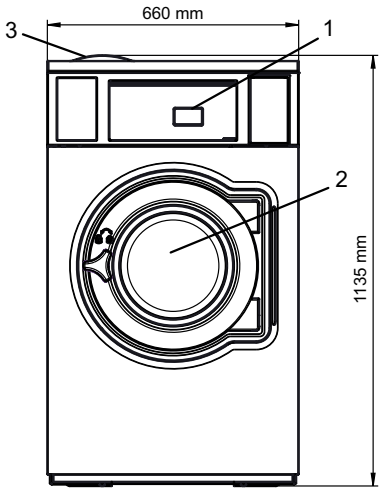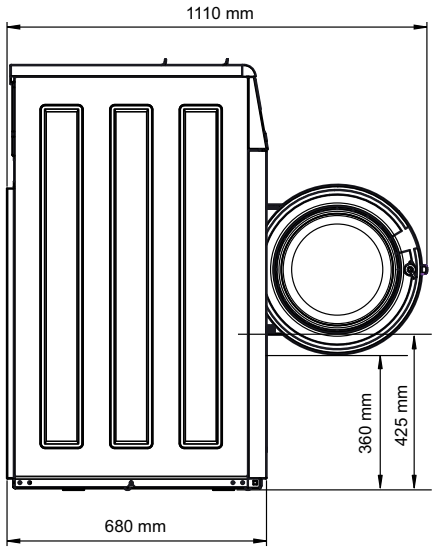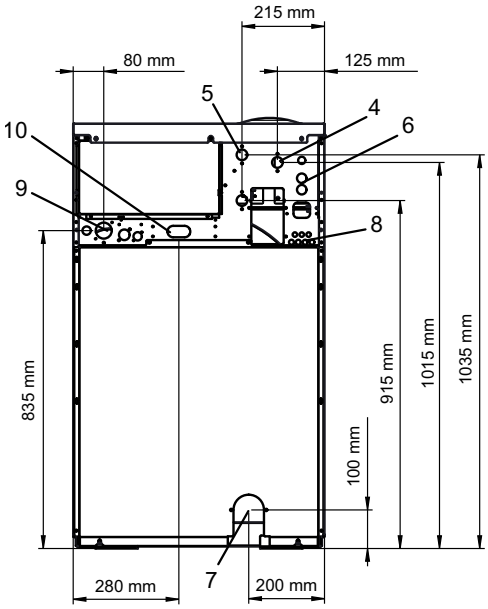
1. The washer extractor is equipped with a built-in type AB airgap according to EN 61770. Maximum working pressure for Australia is 800 kPa.
2. Sound power levels measured according to ISO 60704.
3. Average data. Crated weight/shipping volume depends on configuration. Please contact logistics for exact measures.